FRAME PASSPORT

MENDRISIO 2023



eddy merckx

MENDRISIO

YOUR EDDY MERCKX DEALER

To make sure your bike gets the right service and maintenance, and that the relevant warranty is guaranteed, it is wise to have all service and maintenance through your authorized Eddy Merckx dealer.

WARNING

Unauthorized service and maintenance or replacement with imitation parts lead to damage and the expiry of the warranty.

GO TO WWW.EDDYMERCKX.COM TO FIND YOUR LOCAL DEALER

Eddy Merckx bikes

Beverlosesteenweg 85

3583 Beringen (Belgium)

Tel.: 0032 13 67 36 00

www.eddymerkx.com



WARNING

Read carefully and abide strictly all the instructions contained in this manual and in the frame passport specific to your new EDDY MERCKX frame, which you can download from our website, before using your new EDDY MERCKX frame*!

WARNING

Please keep in mind that this manual has been translated in 5 languages. Should yours not be among those languages, please ask your dealer for a translation in your language before using your new EDDY MERCKX frame! You can find the dealers on our website.

Keep this booklet and all documentation accompanying your EDDY MERCKX frame in a safe place because they contain important information and make sure you deliver it to the new owner of your EDDY MERCKX frame in the event you should decide to sell it.

WARNING

Cycling, both competitive and recreational, can be dangerous. Bad pavement quality, adverse climatic conditions, your state of health, your weight and your dexterity level are among the most important factors – but not the only ones – which can foreseeably cause accidents. The impact energy released in such accidents may and will seriously damage or even break your EDDY MERCKX frame although it is state-of-the-art, which means, made using the best manufacturing technologies and the best materials presently available on the market (see page 7).

*For the purpose of this manual, by EDDY MERCKX frame we refer to a two-member component, frame / fork (on the obvious condition that the latter was made by EDDY MERCKX).

WARNING

THE PURPOSE OF THIS MANUAL IS TO SHOW CORRECT OPERATION AS WELL AS ACTIONS AND SITUATIONS TO BE AVOIDED IN ORDER TO USE AND CONTINUE TO USE YOUR NEW EDDY MERCKX FRAME WITH COMPLETE SAFETY.

On behalf of all of us at EDDY MERCKX, we would like to thank you for your trust in us. We are certain that your new EDDY MERCKX frame will give you hours and hours of thrills. In short, it will make you very happy. We at EDDY MERCKX – however – are especially concerned about your safety. We want to build frames for your children and the children of your children. This is why we invite you to read this manual very carefully. It is intended to show you how to use your EDDY MERCKX frame in complete safety, and, thus, your new bicycle of which the frame is the primary – but not the only – component. In addition to the correct measures, there are also actions and situations to be avoided because they can cause quite serious damage both to you and to the frame. Inspection is a fundamental element that contributes to the assurance of your safety. This is why we urge you to subject your bike to regular inspections by authorized EDDY MERCKX dealer of your choice to assure the maintenance of structural integrity of your EDDY MERCKX frame over time, thus extending its lifecycle.

WARNING

PERIODIC AND REGULAR INSPECTIONS OF YOUR FRAME BY AN AUTHORIZED DEALER IS FUNDAMENTAL FOR YOUR SAFETY.

Be very prudent while riding a bicycle, respect nature, and, first of all, ALWAYS wear a helmet, which should be well fastened, and appropriate special clothing.

Jochim Aerts

President

SAFETY PRECAUTIONS

WARNING! EDDY MERCKX cannot be made liable for damage resulting from unreasonable, unexpected, and in any case improper use and/or handling of your Frame and its fork.

WARNING! To make sure that the fasteners on your Frame are correctly tightened, follow the torque specifications provided in the Frame Torque Information document, which was given to you at the time of purchase of your bicycle or which can be consulted on our website.

WARNING! You must be aware that EDDY MERCKX has designed and manufactured only your frame, and is responsible only for this component. All other components of your bicycle were made by other manufacturers, which obviously answer for them. You must consult the manuals for such other components as well before using your new bicycle, which you can find on the websites of these manufacturers and/or which were given to you at the time of purchase of your bicycle. If – for any reason - you have not received all manuals for the other components, request them from your AUTHORIZED EDDY MERCKX DEALER and/or consult their manufacturers' websites which feature such manuals and read them attentively BEFORE using your new bicycle.

WARNING! Any instruction and/or practical advice contained in this Manual, which deals with your bicycle in its entirety and/or with any individual components thereof apart from the EDDY MERCKX Frame, are provided for you in your best interests, however, they are not intended to mean an implicit or explicit assumption of liability by EDDY MERCKX with regard to such components. Make sure you read carefully and follow the manuals of the manufacturers of your bicycle's components.

WARNING! Never make modifications in the frame, fork, or components. Drilling, filing, sanding, can compromise the safety of your bicycle. You may not replace the original fork unless the replacement part is of the same model. The use of different fork models might not provide the same guarantee of safety and/or could affect your ability to steer your bicycle and/or add unexpected loads.

WARNING! The LIFECYCLE of your EDDY MERCKX Frame can be drastically reduced because of failure to abide by the rules that will follow in the present manual.

WARNING! It is absolutely necessary to inspect, and have your entire bicycle inspected on a regular basis, especially the frame and fork, but also the stem and handlebar, to detect possible signs of wear or ageing.

ACTIONS/INACTION THAT CAN REDUCE THE LIFECYCLE OF YOUR EDDY MERCKX FRAME

Your EDDY MERCKX Frame is a modern product, and EDDY MERCKX has used in its manufacture the most sophisticated methods and materials that the market is capable of offering. EDDY MERCKX has been always committed to making products that provide the best competitive performance and high reliability regarding safety. Similar to any other products, the LIFECYCLE of EDDY MERCKX products is not infinite, and it can be shortened dramatically if the instructions given below are not heeded.

EDDY MERCKX cannot be held liable for damage caused by unreasonable, unexpected and in any case improper use and/or handling of its frames and forks. Such use and handling includes, but is not limited to, the following:

1. Painting and/or re-painting of EDDY MERCKX frames. EDDY MERCKX frames may be re-painted only within the EDDY MERCKX warranty period, exclusively by EDDY MERCKX and only in the original color;
2. Failure to conduct periodic maintenance and inspection of your EDDY MERCKX Frame by the AUTHORIZED EDDY MERCKX DEALER;
3. Use of corroding detergents and some lubricants generally used for cleaning mechanical parts such as, for example, gas-oil, which is capable of dissolving resins cements if not promptly removed;
4. Parking a vehicle with the frame in direct sunlight, because the frames, which are made fully or partly of carbon fiber, can sustain severe damage to their structural integrity when exposed to a source of intense heat;
5. Shocks, falls, or impacts, even apparently insignificant ones. In such cases, have the frame inspected immediately by your AUTHORIZED EDDY MERCKX DEALER before using your bicycle;
6. Modifying and/or repairing your EDDY MERCKX Frame on your own. EDDY MERCKX will under specific conditions handle your frame at the request of your AUTHORIZED EDDY MERCKX DEALER to whom you must bring back your frame when required;
7. Assembly and/or disassembly of your EDDY MERCKX Frame by persons other than an AUTHORIZED EDDY MERCKX DEALER;
8. Use of your EDDY MERCKX Frame on any road surface other than the normal road surface for which it was designed and made;
9. Use of the product by anybody whose weight is in excess of 95 (ninety five) kg. If you are in this weight category, you will need to request that EDDY MERCKX fabricate a frame proper for your weight;
10. Installation on your bicycle of weights, additional weights, and/or other additions such as children's seats;
11. Use of the product by anybody who is not in an adequate psychic/physical condition, allowing him/her to do so, or use under traffic or weather conditions that pose danger; and
12. In general, any use of your EDDY MERCKX Frame that does not comply with practices of a normal or reasonably foreseeable use.

RULES TO ABIDE BY BEFORE THE FIRST USE OF YOUR BICYCLE

WARNING!

YOU SHOULD BECOME FAMILIAR WITH YOUR NEW EQUIPMENT IN AN OBSTACLE-FREE AREA BEFORE USING IT AT HIGH SPEED, UNDER DEMANDING CONDITIONS OR IN THE PRESENCE OF OBSTACLES.

Only your AUTHORIZED EDDY MERCKX DEALER is knowledgeable about and responsible for the correct assembly of your bicycle using the components of your choice. Before riding it at high speed or under demanding conditions like rapid descents, or spurts, become familiar with your new equipment at a moderate speed in an open area that is free of obstacles. We will provide a non-exhaustive list of obvious preventive measures.

WARNING!

Remember that for each of the following steps you must read attentively, and abide strictly by the Manual and/or instructions provided by the manufacturer of the component in question, which are given to you at the time of purchase of your bicycle and/or are available on its manufacturer's website. If the manual of the component was not provided, you can request them from your AUTHORIZED EDDY MERCKX DEALER and/or consult their manufacturers' websites which feature such manuals, before using your new bicycle. What we provide below is merely a number of recommendations based on our many years of experience in competitive cycling, but in no way do they constitute an implicit or explicit assumption on our part of any liability for components that we have not manufactured.

1 **BRAKES.** First of all, and above all, check the brake system for effectiveness by operating the brake lever several times in a row. Braking effectiveness should remain the same even after intensive braking. If this is not the case, you must bring back your bicycle immediately to your AUTHORIZED EDDY MERCKX DEALER. In any case, be careful when applying the front brake too hard. If you suddenly apply the front brake with excessive force, the rear wheel may fly upward and the front wheel can skid to one side, with the consequent loss of control and a likely fall.

2 **RAPID PEDAL RELEASE.** Also make sure that the rapid pedal release mechanisms of your bicycle are well adjusted. The shoes you wear should fit well, and they should easily engage the pedals. By rapidly pushing and pulling, make sure that your feet in no way disengage from the pedals. They must be removed from the pedals only when you want them to be, and this should occur easily without the need to apply any special effort, by a typical swift sideways motion. Should you have difficulties removing them, bring back your bicycle to your AUTHORIZED EDDY MERCKX DEALER before using the bicycle again.

3 **GEAR CHANGE MECHANISMS.** Make yourself familiar with the gear change mechanisms that are installed on your bicycle. Make sure that the power shift is enabled, and avoid using combinations of ratios that make the chain work at a large angle with respect to the ideal plane drawn through the bike's center from front to back. In such case there is a risk that a sudden and improper gear change may cause the chain to get stuck between the sprockets, causing the bicycle to stall suddenly and, as a consequence, the cyclist to fall. Such events, even if they do not cause a fall, can result in gear change maladjustment. More specifically, the exact position of the rear derailleur can change when it shifts the chain to the innermost sprocket that is the closest one to the wheel spokes. In such case either because the derailleur is bent, or because it becomes loose from its support on the frame, or because the end of stroke becomes misadjusted, or under the combined effect of all these factors, it may happen that the lower end of the derailleur gets inserted between the spokes, causing structural damage and a sudden fall, which is inevitable and dangerous. Make sure that the handlebar remains

secure on the stem, has not moved from its position, and does not move if you apply torsion, bending, or rotary forces.

4 **STEERING.** Make sure that the steering does not have any play when you push it vigorously back and forth while holding the bike firmly with the front brake fully applied. Take back the bike to your AUTHORIZED EDDY MERCKX DEALER if any abnormal movements or noises appear after this test; otherwise raise the speed gradually and make sure your bike rides straight and steady, without wobbling, oscillations, or vibrations. Such events are rare; they can be caused by various factors, acting individually or in combination. If you experience vibrations that appear starting from a certain speed and become pronounced when you release the handlebar, take your bicycle to your AUTHORIZED EDDY MERCKX DEALER for inspection of components and/or for bicycle repair.

BASIC FACTS YOU MUST KNOW BEFORE USING YOUR BICYCLE FOR THE FIRST TIME

The bicycle has been so far the most efficient vehicle invented by humankind. However, the bicycle, being a two-wheeled vehicle, must be kept in balance by the cyclist. In addition, by its nature it cannot provide any protective envelope, thus leaving the cyclist fully exposed and particularly vulnerable to surrounding hazards. This is why it is necessary to be most attentive while riding a bicycle. It should be also noted that the energy of movement, which depends on the mass and speed, is always much higher than what we intuitively imagine. In the case of an impact, your kinetic energy does not disappear, but rather turns into structural deformation and heat. In the case of a head-on collision, it is evident that nobody is expecting structural integrity either for the bicycle or for the cyclist. However, it is understood that even when hitting surmountable obstacles such as bumps in the pavement, potholes, manhole covers surrounded by raised asphalt, grates with slits in which the wheel can get caught, etc., an impact may occur that can be destructive.

The problem of which we must be aware is that speed changes determined by the impact are by their nature almost instantaneous, so the forces generated in a fraction of a second within which the speed change occurs can become enormous. An example: If an average cyclist who weighs 80 kg with his bicycle rides at the speed of 40 km per hour and hits an unexpected obstacle with the front wheel, reducing his speed to 10 km per hour in an instant, the bicycle and the cyclist are exposed to a force that depends, in addition to the momentum, on the time within which the above change took place. In the case in question, if the change occurs in 1/10th of a second, the force acting on the bicycle-cyclist system is about 600 kg, but if the change took place in 1/100th of a second, the force could reach 6,000 kg! Therefore, in the event that your bicycle sustains damage as a result of an unfortunate impact, and you fall as a consequence of breakage or deformation of any part of the bicycle, it is not the bicycle to blame, but rather the obstacles that have caused the impact. **This is the reason why it is always necessary to exercise maximum caution while riding bicycles, slowing down substantially where the road may be increasingly bumpy or in any case of poor visibility.**

The materials EDDY MERCKX uses for making the frames and forks are either metal alloys or composites based on carbon fiber. Examples of the first type are steels and various aluminum and titanium alloys. Both metals and composites are of the highest quality and offer mechanical characteristics that assure maximum safety to the user. It is important to note that the two above-mentioned classes of materials behave differently in the event of an unfortunate destructive impact. Metal alloys can snap, but they first experience twisting and bending, whereas the composites just fracture, even though they are more impact-resistant than metal alloys. Of course they are not highly brittle, but they have a typical behavior, and if they fracture, it means that the force that destroyed them and that would also deform or break to pieces an equivalent structure made of a metal alloy exceeding the maximum strength, however high it may be for a product that was well designed and made in accordance with industry standards.

CHECKS TO BE CONDUCTED BEFORE EVERY USE

WARNING! Remember that for each of the following steps you must read attentively, and abide strictly by the Manual and/or instructions provided by the manufacturer of the component in question, which are given to you at the time of purchase of your bicycle and/or are available on its manufacturer's website. If the other manuals were not given to you, we advise you to request them from your AUTHORIZED EDDY MERCKX DEALER and/or consult their manufacturers' websites which feature such manuals, before using your new bicycle. What we provide below is exclusively a number of recommendations based on our many years of experience with competitive cycling, but in no way do they constitute an implicit or explicit assumption on our part of any liability for components that we have not manufactured.

1. **FRAME AND FORK.** A clean bicycle, with its mechanical parts well-oiled and greased and the frame and forks' surfaces glossy, is beneficial not only from the esthetic point of view, but it also allows all its parts to be visible. Possible signs of fatigue or wear cannot escape notice, and removing any accumulation of abrasive material or deposits of corrosive substances (e.g., formed because of sweating) contributes among other things to prolonging the life of your bicycle as well as to preservation of its high commercial value.
2. **TIRES.** Abide by the pressure values that are recommended by the tire manufacturer provided on the tire beads and always make sure that your tires are intact, not too worn, and do not have cuts or scratches that can compromise tightness when the tires are inflated.
3. **WHEELS.** The wheels should not oscillate up and down, or left to right, once they start turning. The wheel rim should pass close to the brake pads without any deviations. If this is not the case, bring back your bicycle to your AUTHORIZED EDDY MERCKX DEALER for wheel alignment before hitting the road.
4. **BRAKES.** Integrity of the brake system is of paramount importance for your safety. Therefore you should check it and/or have it checked. More specifically, the pads should not become too thin from wear. They should be aligned with the rim and spaced apart from it at a distance of 1 to 2 mm. Conduct a careful practical test before mounting the bike by operating the brake levers, which should move freely without coming too close to the handlebar.
5. **WHEEL RELEASE DEVICES.** The wheels should be securely attached to the fork. The quick-release system allows wheel installation to be done without tools. While the locking lever is in lock position the wheel axle should be inserted into its bearing, and the wheel should be perfectly aligned with the structural members of the front fork and rear fork. Lock by hand, applying moderate force to the quick-release lever, which should be set to a position where it is easy to grasp if release is desired.
6. **HANDLEBAR AND STEM.** Careful inspection of the handlebar and its stem should be conducted regularly, and it should be aimed at finding possible signs of fatigue such as scratches, grooves, buckling or cracks. Be thorough because sudden yielding of the stem or bending of the handlebar may have serious consequences for the person riding the bicycle.
7. **SEAT AND SEAT POST.** The weight of the body is supported by the seat. The seat and seat post define a fulcrum with respect to which the muscular level of the legs perform their work. For this reason, inspect frequently both the seat and seat post. More especially, inspect on a regular basis the screws and the seat post head. When you hold the seat with your hands at both ends and check for safety, trying to twist or swing it, it should not give squeaks or move awkwardly.

PERIODIC CHECKS

Checking your bicycle is necessary, primarily to prevent possible problems that can have an adverse effect on your safety. Just using the bicycle can cause events which, if they are neglected, may result in future damage. The most striking example of what we are talking about here is hitting an obstacle, which apparently may leave no trace. Or, it can be a fall that did not cause "anything but some scratches on the frame paint." This is why you must conduct ordinary maintenance at your AUTHORIZED EDDY MERCKX DEALER. Inadequate maintenance accelerates wear. A bicycle that is worn and has been knocked cannot be as functional and reliable as it should be.

SAFETY RULES AND PRACTICAL ADVICE TO MINIMIZE KNOWN RISKS OF CYCLING

1. **HELMET USE.** Any time we mount a bicycle, we must wear a helmet that should be securely attached and that should fit our head well. An unprotected head is very vulnerable. The constant use of a helmet that meets the safety standards will help you avoid injuries.
2. **CLOTHING / GLASSES.** It is also recommended to wear protective glasses and clothing specially designed for cycling.
3. **OBSERVING TRAFFIC RULES.** You must know and observe the regulations governing bicycle riding. These regulations vary from country to country, but there are some uniform traffic rules that we would like to emphasize:
   - In a group of cyclists, move in a single line;
   - Never ride on the wrong side of the road;
   - Use correct and repeating hand signals every time it is required;
   - Try to anticipate unexpected events, being aware that it is harder to see a cyclist than other traffic participants, and that many drivers neither know nor respect cyclists' rights;
   - Use light-reflecting signals and light-colored clothing that reflects light best; and
   - In general, ride your bicycle defensively because you are vulnerable when riding the bicycle on the road, and for this reason you must try and anticipate events and act on the principle of self-protection, which is often achieved by foreseeing potentially dangerous behavior of others.
4. **TECHNICAL ADVICE FOR RIDING.**
   - Avoid pedaling when moving slowly and on narrow turns. Racing bicycles have short wheelbases, and your toes may touch the front wheel. At normal speeds the handlebar is never turned far enough for this to happen;
   - If it is raining and the road is wet, or generally under any conditions that reduce the tire's grip on the pavement, use maximum caution and not only move at low speed, but also avoid braking hard. When it is raining and cloudy, visibility is poor for you and for others, and braking time and braking distance increase;
   - Pay particular WARNING to pedestrian crossings and to wet leaves on the road because it is there that the cohesion is almost totally lost.

SERIAL NUMBER

Use the 8-digit serialnumber on the bottom bracket to register your bike.

DO NOT FORGET YOUR REGISTRATION FOR EXTRA WARRANTY.

Registration at www.eddymerckx.com



ICONS

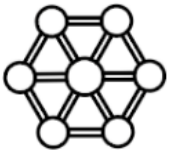

CARBON



MAXIMUM TORQUE

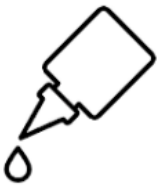

ASSEMBLY GREASE



CARBON PASTE

MENDRISIO

GEOMETRY

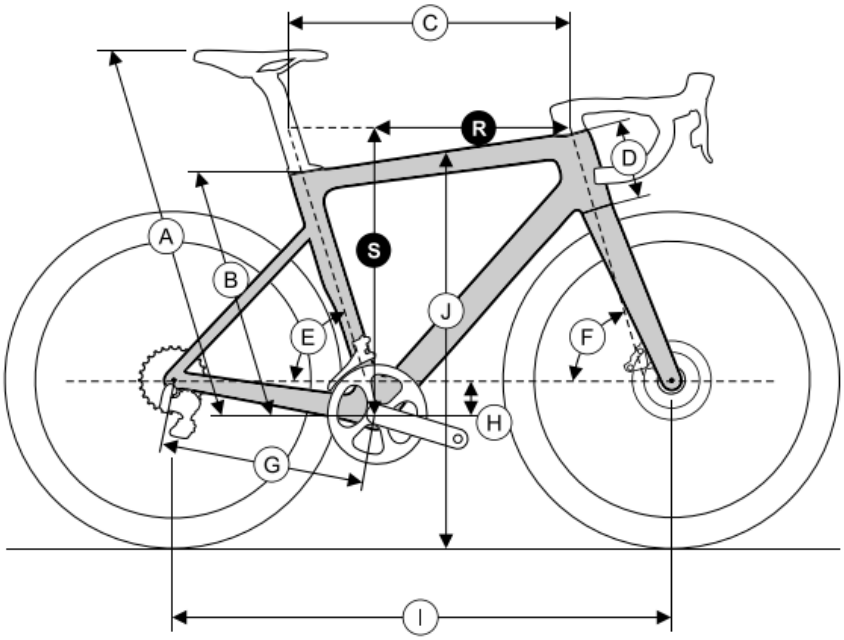

	A	B	C	D	E	F	G	H	I	J	S	R
XS	750	460	526	127	74,0	71,5	410	68	980	769	525	375
S	775	485	545	150	73,5	73,0	410	66	982	796	550	382
M	800	510	566	174	73,0	73,5	410	66	992	821	575	390
L	825	535	587	204	72,5	73,5	413	63	1012	849	600	398
XL	850	560	603	228	72,5	74,0	413	63	1022	874	625	406

WEIGHT

FRAME SIZE	FRAME WEIGHT UNPAINTED*
XS	± 1008 GR
S	± 1036 GR
M	± 1096 GR
L	± 1116 GR
XL	± 1171 GR
FORK	± 379 GR

*Real weight can be different from the weight mentioned by ±10%

TECHNICAL SPECIFICATIONS

SPECIFICATION	INFORMATION
Material	Carbon
Bottom bracket type	BB 86
Maximum tire size (actual size)	30 mm
Headset dimension	1 1/8" – 1 1/4"
Upper headset type bearing	IS42/28.6 (45° / 45°)
Lower headset type bearing	IS47/33 (45° / 45°)
Seatpost type	27,2 mm
Front wheel thru axle type	12x100 thread 1.5 mm
Rear wheel thru axle type	12x142 thread 1.5 mm
Front brake type	Direct mount 140/160 mm
Rear brake type	Direct mount 140/160 mm
Mounting height rear brake	20 mm
Front derailleur hanger	Bolt on
UCI approved	Yes
Weightlimit (rider + equipment)	110 kg

COMPATIBLE GROUPSETS

		1X	2X
SHIMANO	MECHANICAL	NO	YES
	ELECTRONIC	NO	YES
SRAM	MECHANICAL	NO	NO
	ELECTRONIC	NO	YES

MENDRISIO

CHAINLINE

	CHAINLINE	MAXIMUM CHAINRING (T)		
		SMALL (2X)	BIG (2X)	SINGLE (1X)
SHIMANO	44,5 mm (R)	34 T	52 T	-
	49,7 mm (G)	-	-	-
SRAM	45 mm (R)	33 T	52 T	-
	47,5 mm (G)	-	-	-

FORK PARTS

General parts



NR	ARTICLE CODE	DESCRIPTION	QUANTITY
1	QRET124ZA038	4ZA TA 12/100 Front w.o. lever V2	1

FRAME PARTS

General parts



! Maximum torque for bottle cage bolts: 4 Nm

NR	ARTICLE CODE	DESCRIPTION	QUANTITY
1	QRET124ZA039	4ZA TA 12/142 Rear w.o. lever V2	1
2	BLTNOBNOB049	Bottle screw 6sided-in M5 x 15 Black	4

FRAME PARTS

Bottom bracket cover



! Maximum torque for bolts: 2 Nm

NR	ARTICLE CODE	DESCRIPTION	QUANTITY
1	FRPBBREMC002	Bottom Bracket Cover	1
2	BLTNOBNOB059	BB Cover bolt	1

SEATPOST AND SEATPOST CLAMP

General parts

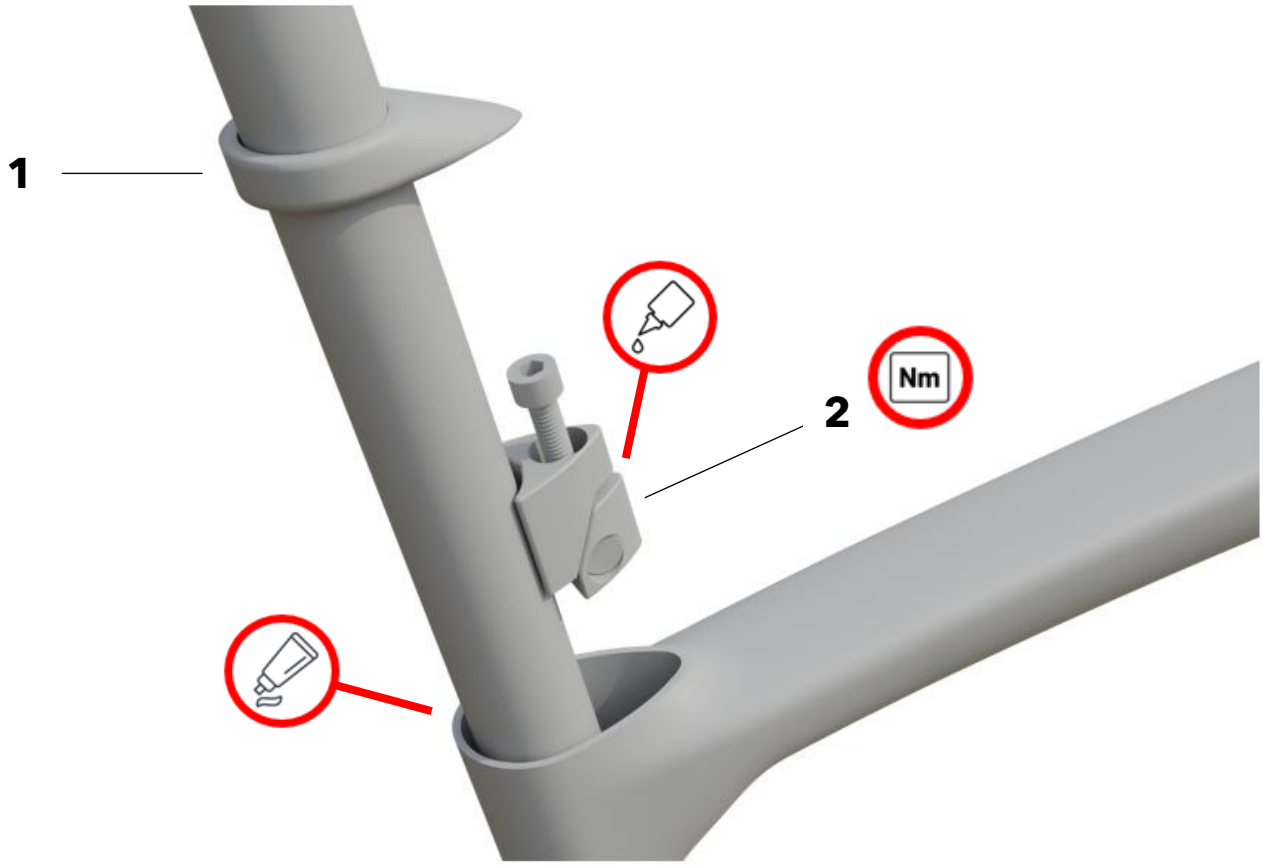

! Important information:

- The Mendrisio is designed for regular round 27,2 mm seatpost
- Minimum insert of the seatpost: 100 mm
- Maximum torque for the seatpost clamp: 10 Nm
- Use carbon paste between the seatpost and the seatpost clamp
- Use assembly grease between seatpost clamp parts

NR	ARTICLE CODE	DESCRIPTION	QUANTITY
1	FRPSEPNOB002	Seat post cover 27,2mm	1
2	SPCUNIRID001	Ridley Unified Integrated Seatpost Clamp	1

CABLE PARTS

SHIMANO Mechanical – 2x



NR	ARTICLE CODE	DESCRIPTION	QUANTITY
1	HAARCERID041*	AMP: Hanger set NFD HXD	1
2	FRPGROJAG003	Jagwire plug flat top - 3mm	1
3	FRPGRORID007	Rear dropout plug - 2,5 mm	1
4	FRPGROJAG010	Jagwire Mechanical Cable grommet flat top - 4mm	1
5	CABFOAJAG001	Jagwire NBR Foam Tube 5,5mm inner/8,2mm outer	1,5 LM

*Mounted on frame

CABLE PARTS

SHIMANO Electronic – 2x



NR	ARTICLE CODE	DESCRIPTION	QUANTITY
1	HAARCERID041*	AMP: Hanger set NFD HXD	1
2	FRPGROJAG002	Jagwire plug flat top - Closed	1
3	FRPGROJAG003	Jagwire plug flat top - 3mm	1
4	FRPGRORID007	Rear dropout plug - 2,5 mm	1
5	SPTDI24ZA007	4ZA DI2 Int Bat Adap 27.2 SEP	1
6	CABFOAJAG001	Jagwire NBR Foam Tube 5,5mm inner/8,2mm outer	1 LM

*Mounted on frame

CABLE PARTS

SRAM AXS – 2x

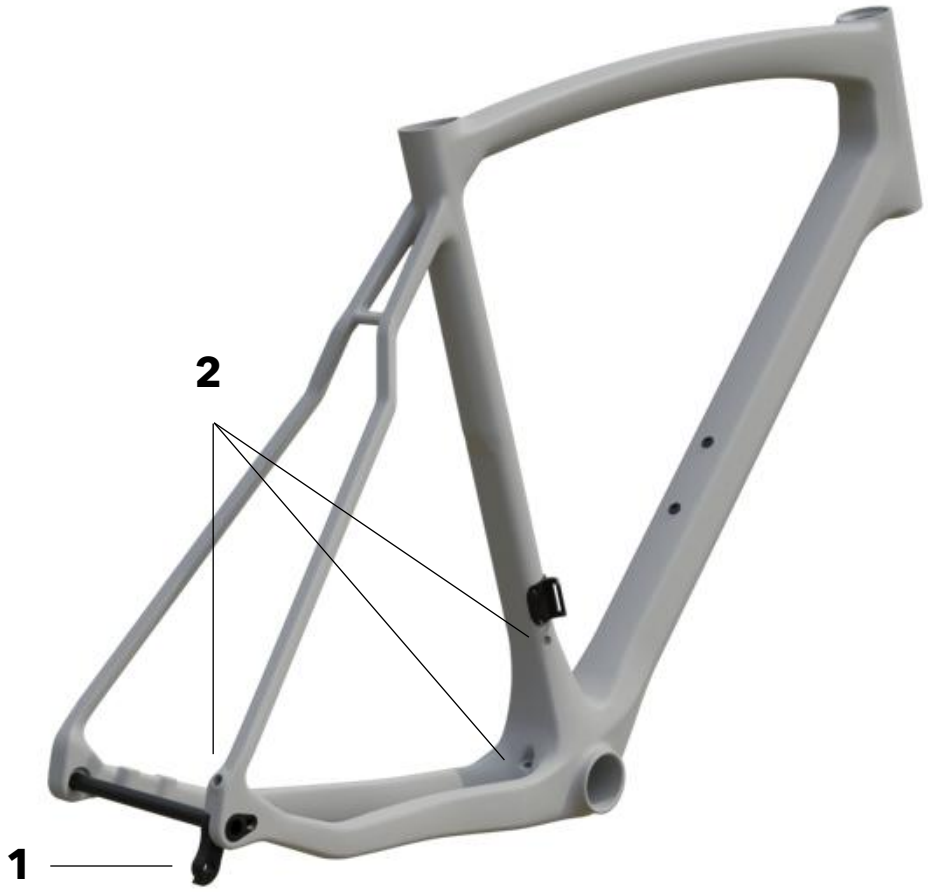

NR	ARTICLE CODE	DESCRIPTION	QUANTITY
1	HAARCERID041*	AMP: Hanger set NFD HXD	1
2	FRPGROJAG002	Jagwire plug flat top - Closed	3
3	CABFOAJAG001	Jagwire NBR Foam Tube 5,5mm inner/8,2mm outer	1 LM

*Mounted on frame

HANDLEBAR PARTS

Forza Cirrus Pro Integrated & Forza Cirrus Pro Integrated Flared

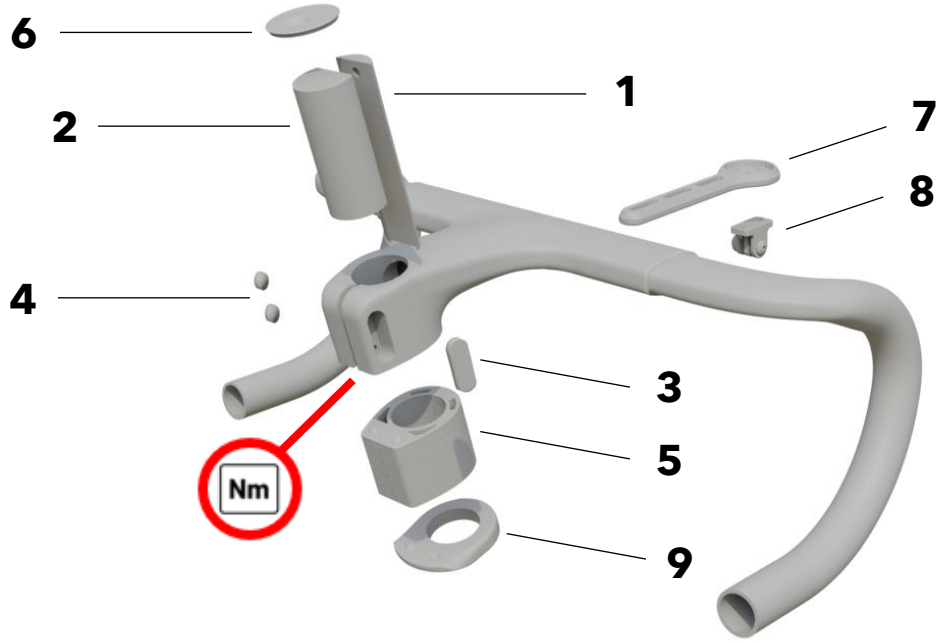

! Maximum torque of cockpit bolts: 6 Nm

NR	ARTICLE CODE	DESCRIPTION	QUANTITY
1	SPADSS4ZA006	4ZA D-Shaped steerer supportive spacer 7E9 LONG	1
2	FPLCRN4ZA011	4ZA D-Shaped LONG (60mm) Expander 7E9 w/ Lip	1
3	HBPAER4ZA015	Handlebar nut - U-system + 2 bolts & washers	1
4	HBPGRORID005	Stem plug - Integrated Aero HBR 7E3.1	2
5	SPSAER4ZA004	4ZA CIP IC Aero spacer set 40 mm	1
6	HSPCAP4ZA015	4ZA D-Shape Headset Top cap BLA	1
7	HBPAER4ZA022	Computer inserts for Garmin / Mio / Wahoo	1
7	HBPAER4ZA028	Computer mount set Nimbus Pro / Cirrus Pro	1
8	HBPAER4ZA005	Camera mount set	1
9	SPAAER4ZA009	4ZA CIP IC Integrated cone spacer - Round	1

The cockpit is available in the following sizes:

Integrated:

	Stem	Width Hood	Width Drops	Flare	Drop	Reach
Standard	90	380 c-c	400 c-c	5°	130	75
Standard	100	400 c-c	420 c-c	5°	130	75
Standard	110	400 c-c	420 c-c	5°	130	75
Standard	120	420 c-c	440 c-c	5°	130	75

Integrated Flared:

	Stem	Width Hood	Width Drops	Flare	Drop	Reach
Standard	90	380 c-c	440 c-c	16°	120	70
Standard	100	400 c-c	460 c-c	16°	120	70
Standard	110	400 c-c	460 c-c	16°	120	70
Standard	120	420 c-c	480 c-c	16°	120	70

HANDLEBAR PARTS

With Deda superbox – cables semi-integrated

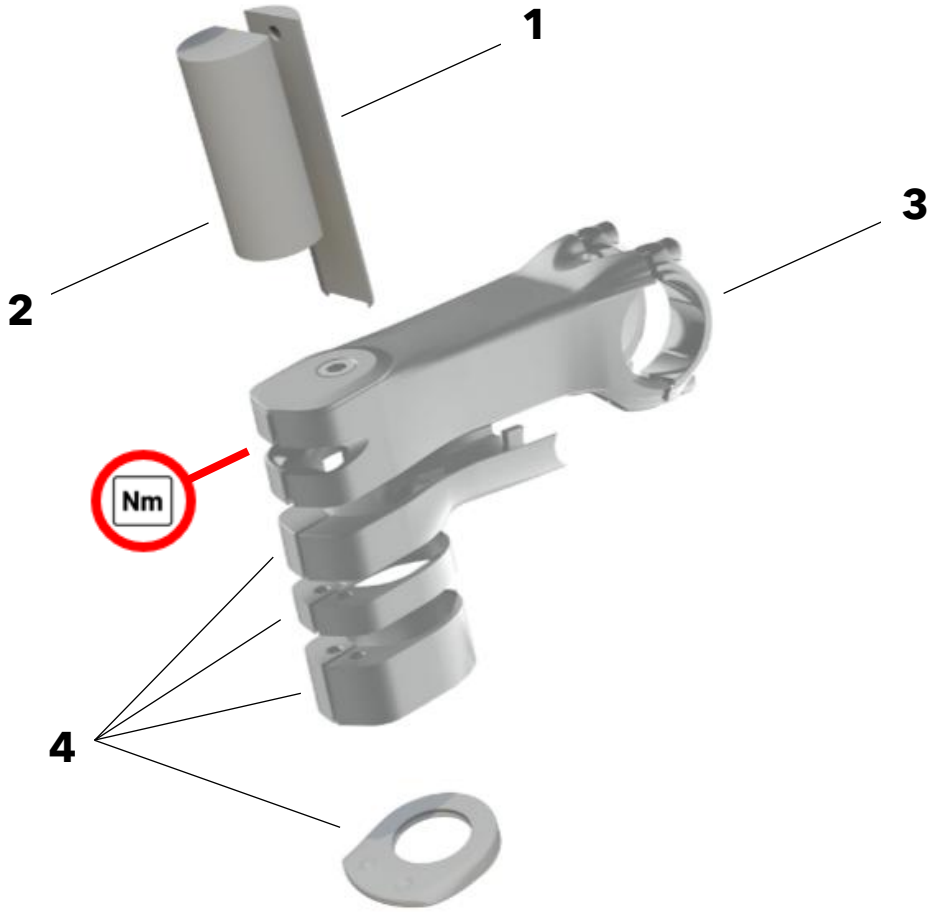

! Maximum torque of cockpit bolts: 6 Nm

NR	ARTICLE CODE	DESCRIPTION	QUANTITY
1	SPADSS4ZA006	4ZA D-Shaped steerer supportive spacer 7E9 LONG	1
2	FPLCRN4ZA011	4ZA D-Shaped LONG (60mm) Expander 7E9 w/ Lip	1
3	STESBODEE003*	Deda Super Box POB 110mm	1
4	SPASBODEE002	Spacerset Deda Super Box	1

*Available in different sizes